TABLE OF DIMENSIONS & REINFORCING STEEL
(Wings for One Structure End)

Dimensions					Variable Reinforcing				Estimated (3) Quantities per ft of wing length (2~Wings)	
Maximum Wingwall Height (10) Hw	W	X	Y	Z	Bars J1		Bars J2			
					Size	Spa	Size	Spa	Reinf (Lb/Ft)	Conc (CY/Ft)
2'-6"	2'- 5"	1'- 0"	9"	7"	#4	1'-0"	#4	1'-0"	33.73	0.248
3'-0"	2'- 5"	1'- 0"	9"	7"	#4	1'-0"	#4	1'-0"	37.07	0.261
3'-6"	2'- 5"	1'- 0"	9"	7"	#4	1'-0"	#4	1'-0"	37.74	0.273
4'-0"	2'- 5"	1'- 0"	9"	7"	#4	1'-0"	#4	1'-0"	38.41	0.285
4'-6"	3'- 2"	1'- 6"	1'- 0"	7"	#4	1'-0"	#4	1'-0"	41.75	0.330
5'-0"	3'- 2"	1'- 6"	1'- 0"	7"	#4	1'-0"	#4	1'-0"	45.09	0.343
5'-6"	3'- 2"	1'- 6"	1'- 0"	7"	#4	1'-0"	#4	1'-0"	45.75	0.355
6'-0"	3'- 2"	1'- 6"	1'- 0"	7"	#4	1'-0"	#4	1'-0"	46.42	0.367
7'-0"	3'- 8"	1'- 9"	1'- 3"	7"	#4	1'-0"	#4	1'-0"	52.77	0.414
8'-0"	4'- 2"	2'- 0"	1'- 6"	8"	#5	1'-0"	#4	1'-0"	60.19	0.486
9'-0"	4'- 8"	2'- 3"	1'- 9"	8"	#4	6"	#4	6"	81.49	0.535
10'-0"	5'- 2"	2'- 6"	2'- 0"	8"	#5	6"	#4	6"	97.25	0.584
11'-0"	5'- 8"	2'- 9"	2'- 3"	8"	#6	6"	#5	6"	133.65	0.634
12'-0"	6'- 2"	3'- 0"	2'- 6"	9"	#7	6"	#5	6"	162.29	0.721

TABLE OF WINGWALL REINFORCING (2~Wings)

Bar	Size	No.	Spa
DL & DS	#5	~	1'-0"
E	#4	~	1'-0"
F	#4	~	1'-0"
G	#6	4	~
M	#4	4	~
P	#4	~	1'-0"
RL	#5	3	~
RS	#5	3	~
V	#4	~	1'-0"

TABLE OF ESTIMATED CULVERT TOEWALL QUANTITIES

Bar	Size	No.	Spa
L	#4	~	1'-6"
Q	#4	1	~
Reinf (Lb/Ft)			2.45
Conc (CY/Ft)			0.037

TABLE OF ESTIMATED ANCHOR TOEWALL QUANTITIES

Bar	Size	No.	Spa
K	#4	~	1'-0"
N	#5	6	~
OL	#4	3	~
OS	#4	3	~
Reinf (Lb/Ft)			9.82
Conc (CY/Ft)			0.074

(1) Extend Bars P 3'-0" minimum into bottom slab of Box Culvert.

(2) Adjust to fit as necessary to maintain 1 ¼" clear cover and 4" minimum between bars.

(3) Quantities shown are based on an average wing height for two wings (one structure end). To determine total quantities for two wings multiply the tabulated values by 0.5(A + Lw).

(4) Recommended values of Slope are: 3:1, 4:1, & 6:1. Slope shall be 3:1 or flatter.

(5) When shown elsewhere on the plans, a 5" deep concrete riprap shall be constructed. Payment for riprap shall be as required by Item 432, "Riprap". Unless otherwise shown on the plans or directed by the Engineer, construction joints or grooved joints, oriented in the direction of flow, and shall extend across the full distance of the riprap, at intervals of approximately 20'. When such riprap is provided, the culvert toewall shown in SECTION B-B will not be required.

(6) At Contractor's option, Culvert Toewall may be ended flush with Wingwall Toewall. Adjust reinforcing from that shown as necessary.

(7) 3" min to 5'-0" max. Estimated curb heights are shown elsewhere in the plans. For structures without railing and curbs taller than 1'-0", refer to ECD standard.

(8) For vehicle safety, curbs shall project no more than 3" above finished grade. Curb heights shall be reduced, if necessary, to meet these requirements. No changes will be made in quantities and no additional compensation will be allowed for this work.

(9) Culvert Skew (limited to 15° or 30°)

(10) See "Table Of Maximum Wing Heights" for various slopes. Height is limited based on a 33'-6" maximum safety pipe runner length.

(11) Typical Wingwall angle for all skews.

TABLE OF MAXIMUM (10) WING HEIGHTS (Hw max)

Side Slope	Hw max
3:1	11'- 5"
4:1	8'-10"
6:1	6'- 1"

WING DIMENSION CALCULATIONS:

Formulas: (All values are in Feet)

Hw = H + T + C − 0.250' (10)

A = (Hw − 0.333') (SL)

B = (A) [Tangent (Θ + 15°)]

Lw = (A) ÷ [Cosine (Θ + 15°)]

For Cast-in-place culverts:

Ltw = [(N) (S) + (N + 1) (U)] ÷ (Cosine Θ)

For Precast culverts:

Ltw = [(N) (2U + S) + (N − 1) (0.500')] ÷ (Cosine Θ)

Lc = (Ltw) − (2U) ÷ (Cosine Θ)

Atw = (Lc) + (B)

Total Wingwall Area (Two Wings ~ S.F.)
= (0.5) (Hw + 0.333') (Lw + A)

Hw = Height of Wingwall
SL:1 = Side Slope Ratio (Horizontal : 1 Vertical)
Lw = Length of Wingwall
Ltw = Culvert Toewall Length
Lc = Culvert Curb between Wings
Atw = Anchor Toewall Length
N = Number of Culvert Spans
Θ = Culvert Skew

See applicable box culvert standard for H, S, T, and U values. See Table of Maximum Wall Heights for limits on Hw.

GENERAL NOTES:

Designed according to AASHTO LRFD Specifications.

The Safety End Treatments shown herein are intended for use in those installations where out of control vehicles are likely to traverse the openings approximately perpendicular to the Pipe Runners.

Pipe Runners are designed for a traversing load of 1,800 pounds at yield as recommended by Research Report 280-1, "Safety Treatment of Roadside Cross-Drainage Structures", Texas Transportation Institute, March 1981.

All reinforcing steel shall be Grade 60.

Synthetic fibers listed on the "Fibers for Concrete" Material Producer List (MPL) may be used in lieu of steel reinforcing in riprap concrete unless noted otherwise.

All concrete shall be Class "C" and shall have a minimum compressive strength of 3600 psi.

All reinforcing bars shall be adjusted to provide a minimum of 1 ¼" clear cover.

When structure is founded on solid rock, depth of toewalls for culverts and wingwalls may be reduced or eliminated as directed by the Engineer.

See BCS sheet for additional dimensions and information.

All bolts, nuts, washers, brackets, angles, and pipe runners are considered parts of the Safety End Treatment for payment.

Pipe Runners shall conform to the requirements of ASTM A53 (Type E or S, Grade B), ASTM A500 (Grade B), or API 5LX52.

Bolts and nuts shall conform to ASTM A307. Steel plates shall conform to ASTM A36. All steel components, except reinforcing, shall be galvanized. Galvanizing damaged during transport or construction shall be repaired in accordance with the specifications.

The quantities for concrete and reinforcing steel resulting from the formulas given on this sheet are for Contractor's information only.

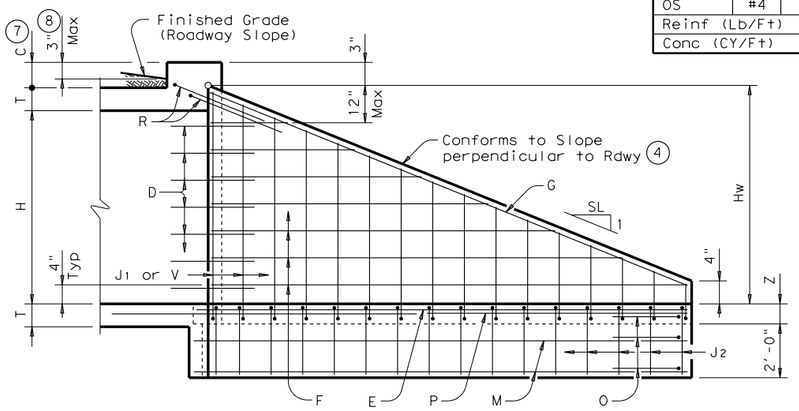

INSIDE ELEVATION OF WINGWALL

(Showing reinforcing. Culvert and Culvert Toewall reinforcing not shown for clarity.)

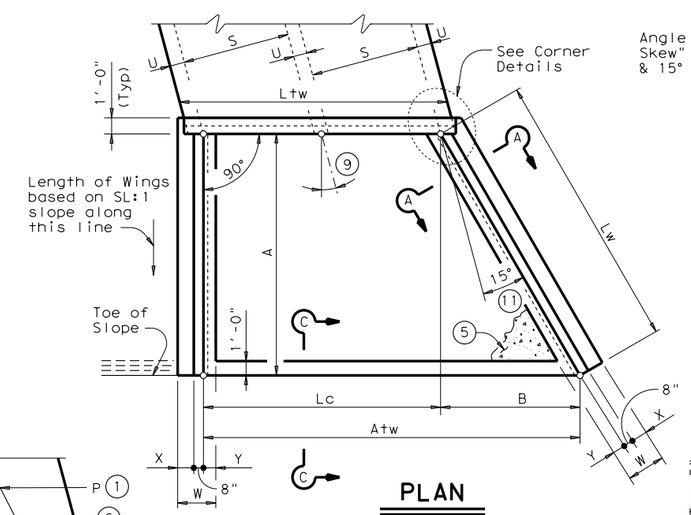

PLAN

(Showing dimensions and 15° Skew.)

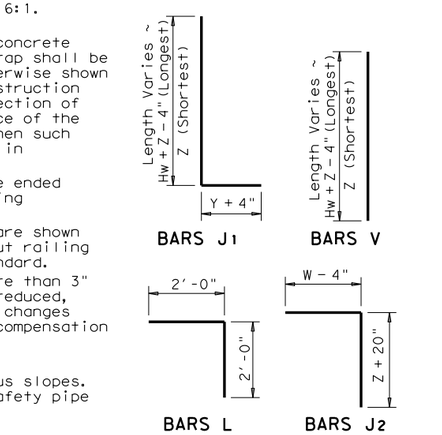

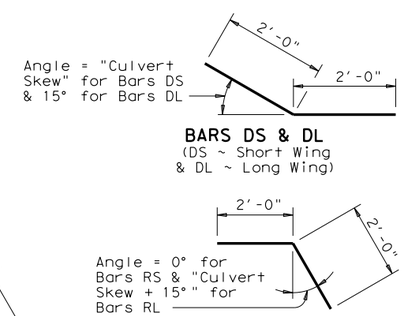

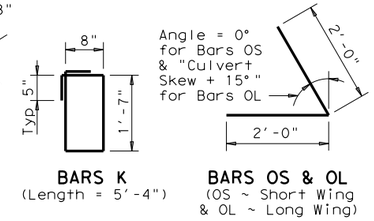

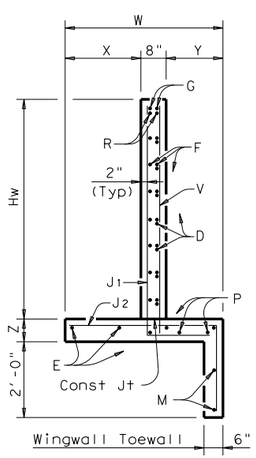

SECTION A-A

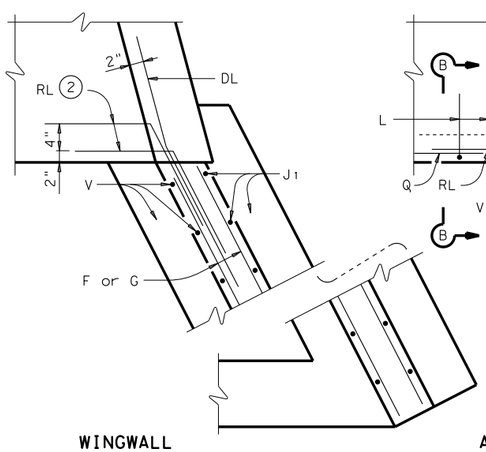

WINGWALL

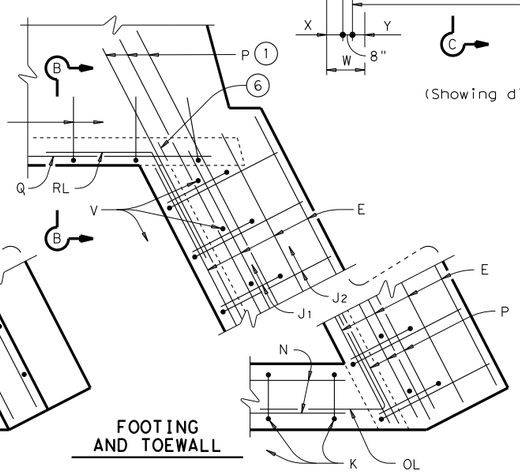

FOOTING AND TOEWALL

CORNER DETAILS

(Culvert and Culvert Toewall reinforcing not shown for clarity.)

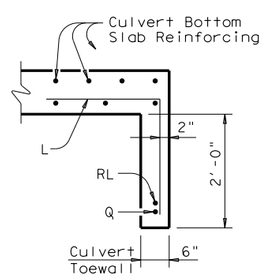

SECTION B-B (5)

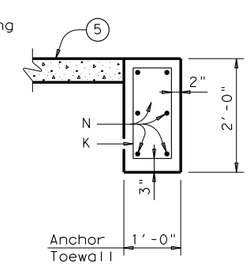

SECTION C-C

SHEET 1 OF 3

Texas Department of Transportation — Bridge Division Standard

SAFETY END TREATMENT WITH FLARED WINGS

FOR 15° & 30° SKEW BOX CULVERTS
TYPE I ~ CROSS DRAINAGE

SETB-FW-S

FILE: setbfsse.dgn	DN: GAF	CK: CAT	DW: TxDOT	CK: GAF
©TxDOT February 2010	CONT	SECT	JOB	HIGHWAY
REVISIONS 11-10: Add note for synthetic fibers.	DIST		COUNTY	SHEET NO.

DATE:
FILE:

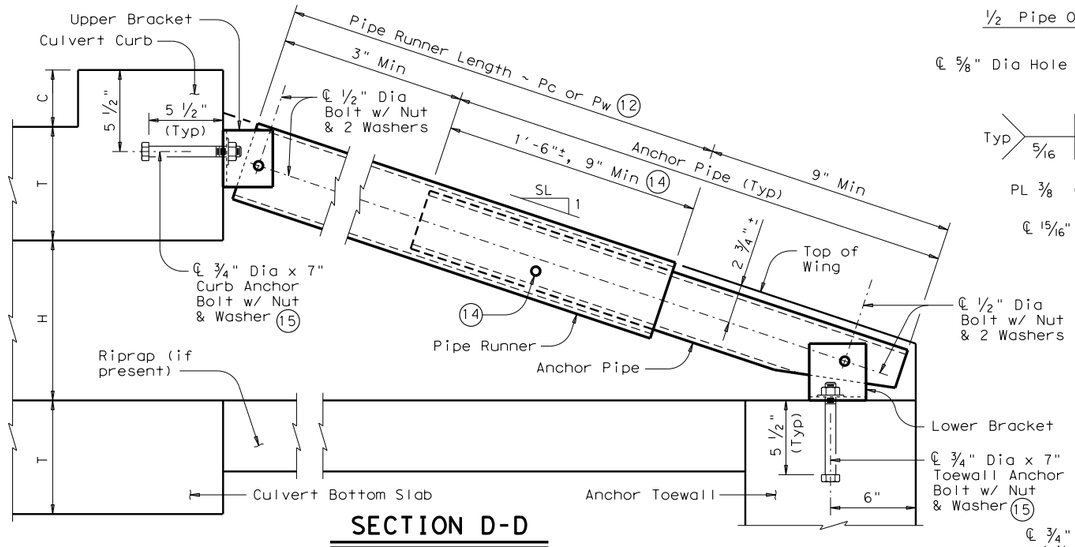

SECTION D-D

(Showing Curb Pipe Runner. Except for upper bracket, Wingwall Pipe Runners are similar.)

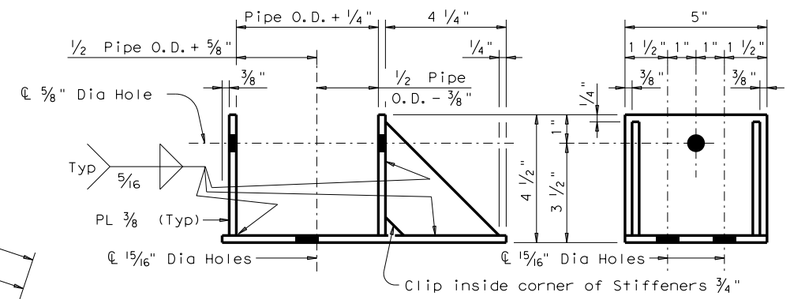

ELEVATION **SIDE VIEW**

3/4" Anchor Bolt shall be installed in hole nearest to the culvert curb. Other bolt hole is intended for use on the opposite hand wingwall.

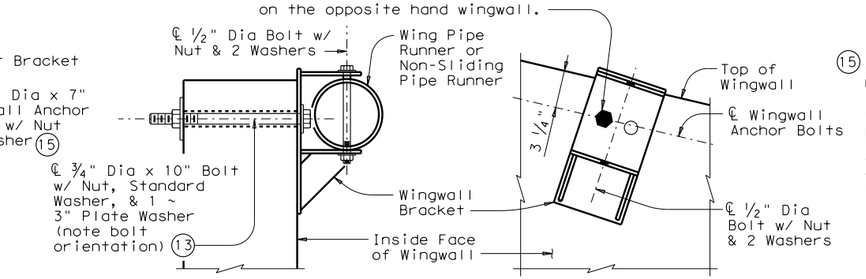

SECTION E-E (Showing installed bracket.)

ELEVATION (Showing installed bracket normal to Wall. Pipe not shown for clarity.)

Note: Wingwall Bracket shall match the Upper Curb Bracket size.

WINGWALL BRACKET DETAILS

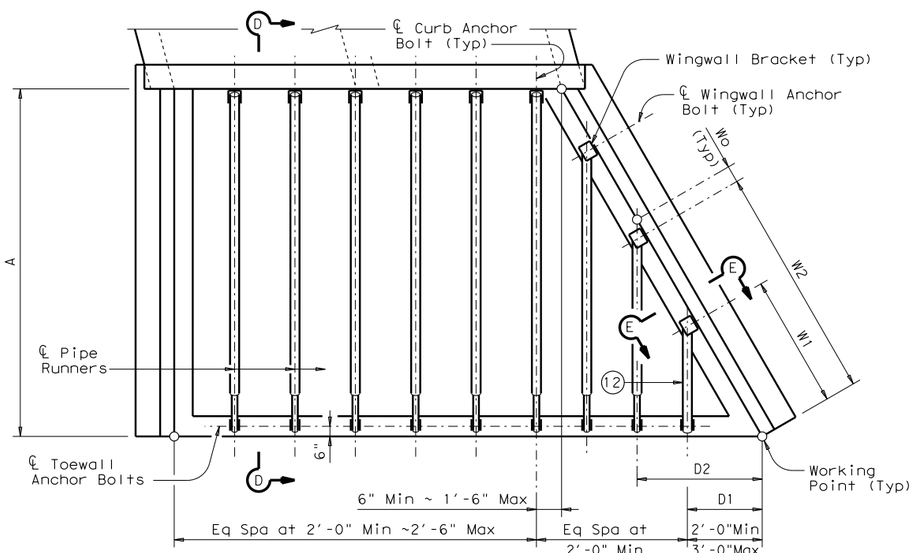

PIPE RUNNER PLAN

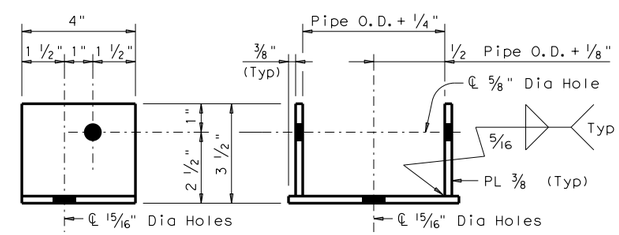

SIDE VIEW **ELEVATION**

Note: Upper and Lower Brackets shall, except for the brackets used with Non-Sliding Pipe Runners, match the required pipe diameters as shown in the table.

UPPER & LOWER BRACKET DETAILS

MAXIMUM PIPE RUNNER LENGTHS & REQUIRED PIPE RUNNER AND ANCHOR PIPE SIZES

Maximum Pipe Runner Length (Pc or Pw)	Required Pipe Runner Size			Required Anchor Pipe Size		
	Pipe Size	Pipe O.D.	Pipe I.D.	Pipe Size	Pipe O.D.	Pipe I.D.
9'-4"	3" STD	3.500"	3.068"	2" STD	2.375"	2.067"
19'-0"	4" STD	4.500"	4.026"	3" STD	3.500"	3.068"
33'-6"	5" STD	5.563"	5.047"	4" STD	4.500"	4.026"

(12) If Pipe Runner Length Pw is 1'-9" or less, a single Non-Sliding Pipe Runner shall replace the normal Pipe Runner and Anchor Pipe. See NON-SLIDING PIPE RUNNER DETAILS for additional information.

(13) At Contractor's option, 7/8" diameter hole may be formed or cored drilled. Percussion drilling is not permitted. Adjust placement of reinforcing steel as necessary to avoid bolt holes.

(14) After installation of Pipe Runner, the 1/2" inspection hole shall be utilized to ensure that the lap of the Anchor Pipe with the Pipe Runner is adequate.

(15) At Contractor's option, an epoxy anchorage system may be used. Anchorage system chosen must be able to achieve an ultimate tensile resistance of 20 kips. Anchor diameter shall be 3/4". The Contractor must provide evidence to the Engineer that this can be achieved. Evidence of adequate tensile resistance can be based on the manufacturer's published values of ultimate tensile strength (anchor spacing and edge distance must be accounted for). Anchor installation, including hole size, drilling, and clean-out, must be in accordance with the manufacturer's recommendations.

PIPE RUNNER DIMENSION CALCULATIONS:

Formulas:

W"n" = (K3) (D"n") - (Wo)

Pw"n" = (D"n") (K2) - (2.063)

Pw1 Non-Sliding Pipe Runner (If required)
= (D1) (K2) - (0.563)

Pc = (A) (K1) - (1.688)

W"n" = Distance from Working Point to centerline Anchor Bolt measured along bottom inside face of Wing

D"n" = Distance from Working Point to centerline Pipe Runner measured along outside face of Anchor Toewall

Pw = Wingwall Pipe Runner Length

Pc = Curb Pipe Runner Length

K = Constant Values for use in formulas

Slope SL:1	K1	K2~15° Skew	K2~30° Skew
3:1	~ 1.054	~ 1.826	~ 1.054
4:1	~ 1.031	~ 1.785	~ 1.031
6:1	~ 1.014	~ 1.756	~ 1.014

K3 = 15° Skew ~ 2.000
30° Skew ~ 1.414

"n" = Wing Pipe Runner Number

Wo = 15° Skew ~ 5"
30° Skew ~ 2 1/2"

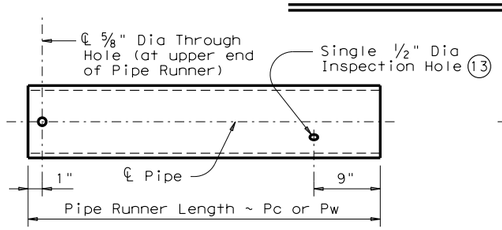

Note: Pipe diameter required for curb pipe runner shall also be used for wingwall pipe runner.

PIPE RUNNER DETAILS

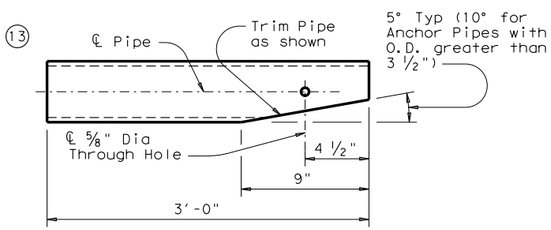

ANCHOR PIPE DETAILS

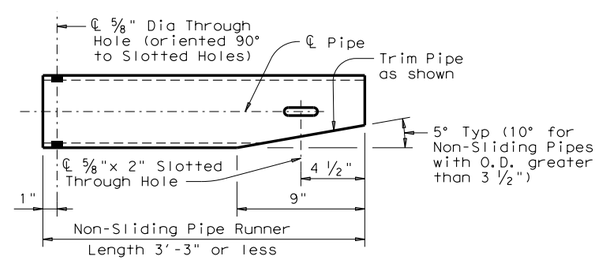

Note: Pipe size shall be same as required for curb pipe runner. Adjust the corresponding Lower Bracket accordingly.

NON-SLIDING PIPE RUNNER DETAILS

DATE:
FILE:

Texas Department of Transportation — Bridge Division Standard

SAFETY END TREATMENT WITH FLARED WINGS

FOR 15° & 30° SKEW BOX CULVERTS
TYPE I ~ CROSS DRAINAGE

SETB-FW-S

FILE: setbfsse.dgn	DN: GAF	CK: CAT	DW: TxDOT	CK: GAF
©TxDOT February 2010	CONT	SECT	JOB	HIGHWAY
REVISIONS				
11-10: Add note for synthetic fibers.	DIST	COUNTY		SHEET NO.

Culvert Station and/or Creek name followed by applicable end (Lt, Rt or Both) (16)	Lc (Ft)	L1 (Ft)	L2			D1 (Ft)	L3			W1 (Ft)	L4			L5 (Ft)	Curb Pipe Runner (Pc)		Longest Wing Pipe Runner (Pw) (Ft)	Shortest Wing Pipe Runner (Pw) (Ft)	Non-Sliding Wing Pipe Runner (if applicable) (Ft)	Curb, Wing, and/or Non-Sliding Pipe Runners		3'-0" Anchor Pipe	
			No. Spa	Spa at (Ft)	Overall Length (Ft)		No. Spa	Spa at (Ft)	Overall Length (Ft)		No. Spa	Spa at (Ft)	Overall Length (Ft)		No.	Length (Ft)				Size (3",4" or 5")	Total (16) Length (Ft)	Size (2",3" or 4")	Total (16) Length (Ft)

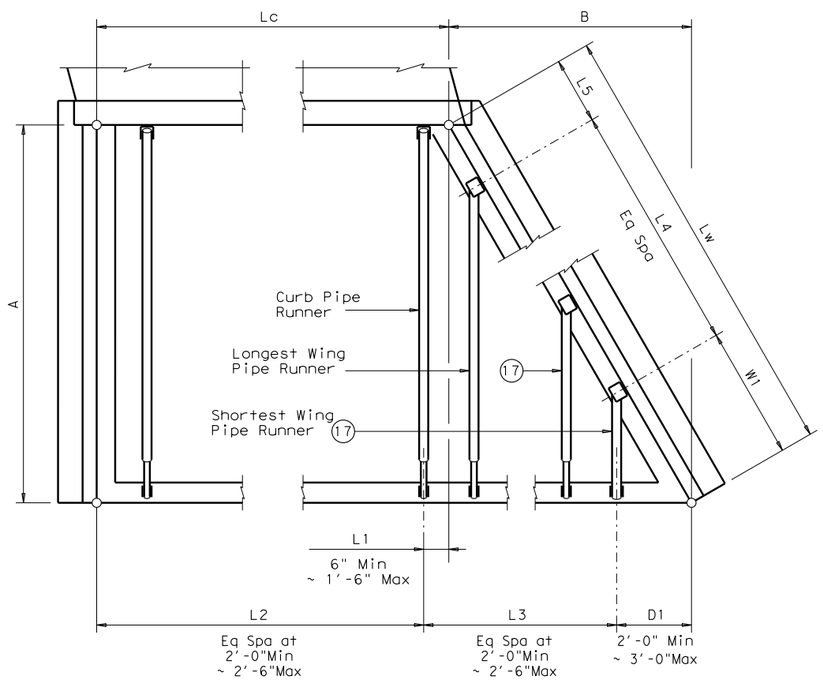

PIPE RUNNER LAYOUT

Note: Right forward culvert skew shown, actual culvert skew may be opposite hand.

(16) Quantities shown are for one structure end if Lt or Rt. Quantities shown are for two structure ends if Both.

(17) If the outermost Wing Pipe Runner is a Non-Sliding Pipe Runner, the next outermost Wing Pipe Runner shall be considered the Shortest.

SPECIAL NOTE:

This tabular sheet is to be filled out by the culvert specifier and provides information for the construction details and quantities of Pipe Runners.

An Excel 97 spreadsheet to assist in completing this table can be downloaded from the Bridge Standards (English) web page on the TxDOT web site. The completed sheet shall be signed, sealed, and dated by a licensed Professional Engineer.

Note that the tabular quantities are given for estimating purposes only. It is likely that these quantities will change due to field conditions. Therefore, all dimensions shall be verified by the Contractor in the field prior to fabrication of the Safety End Treatment components.

DATE:
FILE:

Texas Department of Transportation — Bridge Division Standard

SAFETY END TREATMENT WITH FLARED WINGS

FOR 15° & 30° SKEW BOX CULVERTS
TYPE I ~ CROSS DRAINAGE

SETB-FW-S

FILE: setbfsse.dgn	DN: TxDOT	CK: TxDOT	DW: TxDOT	CK: GAF
©TxDOT February 2010	CONT	SECT	JOB	HIGHWAY
REVISIONS				
11-10: Add note for synthetic fibers.	DIST	COUNTY		SHEET NO.