DISCLAIMER: The use of this standard is governed by the "Texas Engineering Practice Act". No warranty of any kind is made by TxDOT for any purpose whatsoever. TxDOT assumes no responsibility for the conversion of this standard to other formats or for incorrect results or damages resulting from its use.

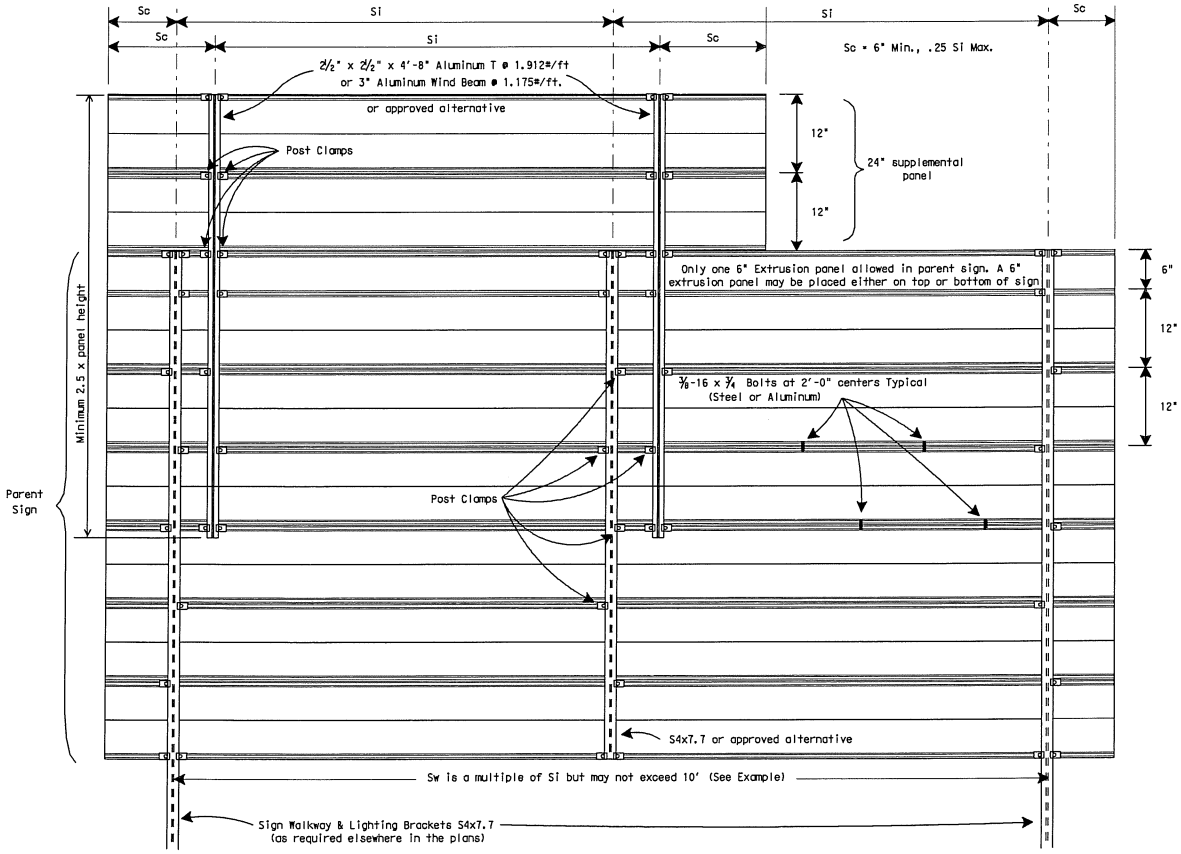

REAR VIEW

EXAMPLES (FOR DETERMINING Si and Sw)

NO.	ZONE	"d"	EXIT PANEL	WALKWAY	Si	Sw	COMMENT
1	1	15.0	YES	YES	4.5	9.0	Sw=2x(Si)
2	2	14.0	YES	NO	7.5	7.5	Sw = Si
3	1	15.0	NO	NO	8.5	8.5	Sw = Si
4	3	14.0	NO	YES	10.0	10.0	Sw = Si

Values shown for Si are maximum values. Si may be varied for different sign lengths and Truss mounting conditions. Sw should not exceed two times Si(Max.) or 10 feet.

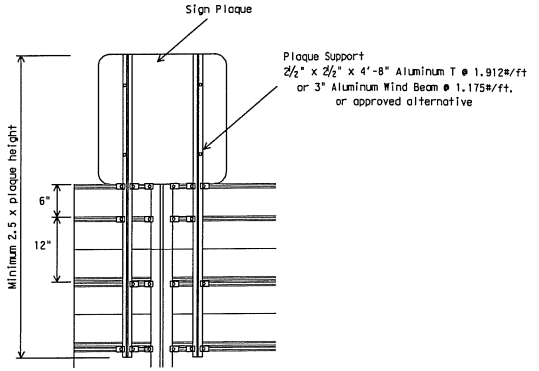

SIGN PLAQUE MOUNTING DETAIL

MAXIMUM SIGN SUPPORT SPACING "Si" (FEET)

"d" Deepest Sign in Group (Ft.)	EXTRUDED ALUMINUM SIGN PANELS															
	WITH EXIT NUMBER PANELS								WITHOUT EXIT NUMBER PANELS							
	WITH WALKWAYS				WITHOUT WALKWAYS				WITH WALKWAYS				WITHOUT WALKWAYS			
	WIND ZONE				WIND ZONE				WIND ZONE				WIND ZONE			
	1	2	3	4	1	2	3	4	1	2	3	4	1	2	3	4
15	4.5	7	8	10	5	7	8	10	7	8	9	10	8.5	10	10	10
14	6	7.5	9.5	10	6	7.5	9.5	10	8	9	10	10	10	10	10	10
13	7.5	9	10	10	7.5	9	10	10	9	10	10	10	10	10	10	10
12	8.5	10	10	10	8.5	10	10	10	10	10	10	10	10	10	10	10
11 or less	10	10	10	10	10	10	10	10	10	10	10	10	10	10	10	10

For fiberglass sign installations, see manufacturer's recommendations.

Texas Department of Transportation
Traffic Operations Division

SIGN MOUNTING DETAILS-
OVERHEAD SIGNS
EXTRUDED ALUMINUM

SMD(2-4)-08

© TxDOT December 1995

DN: TXDOT	CK: TXDOT	DW: TXDOT	CK: TXDOT
CONT	SECT	JOB	HIGHWAY
DIST	COUNTY		SHEET NO.

REVISIONS
9-08

27D

DATE:
FILE: